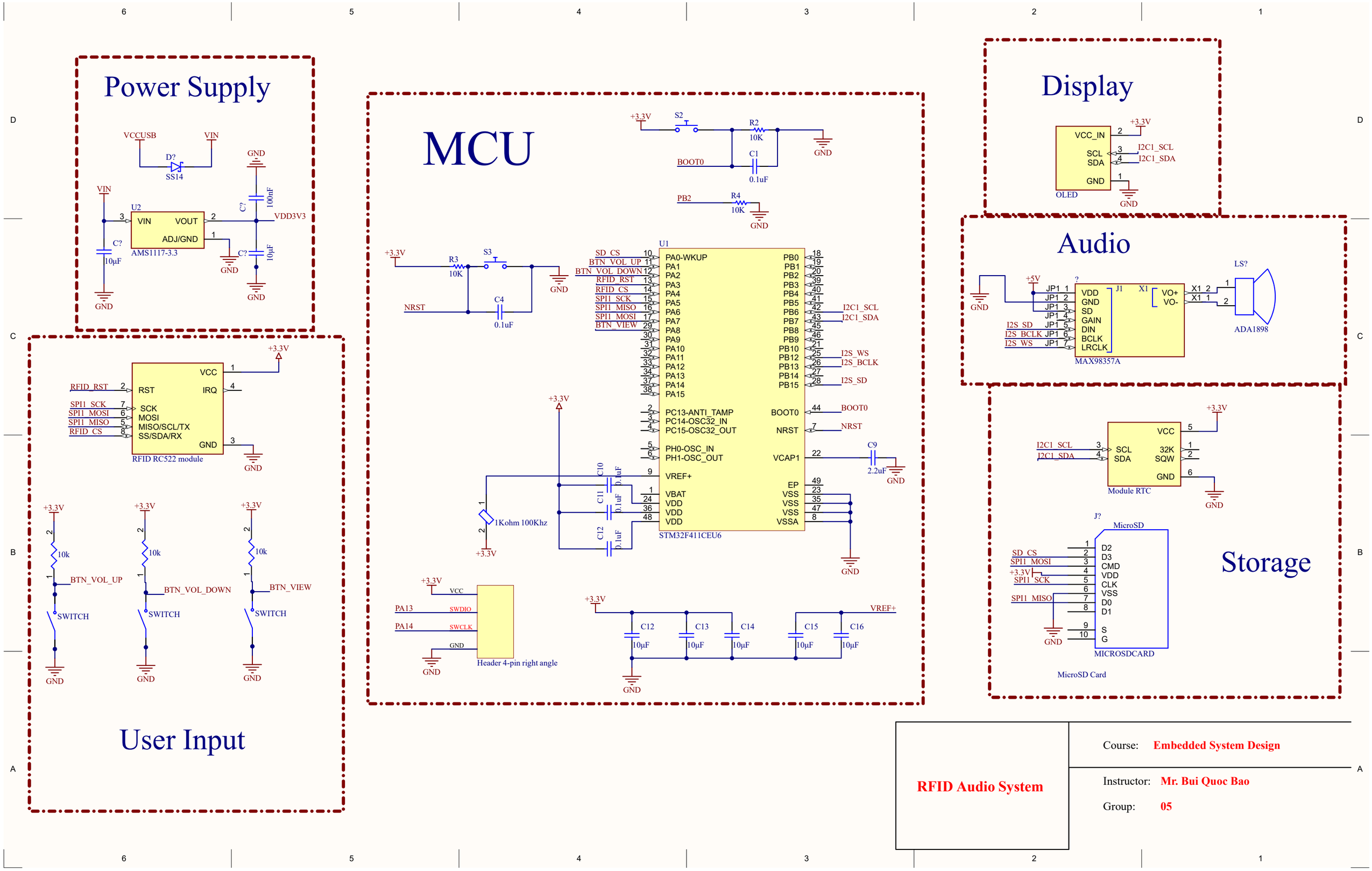

RFID Audio System

Course: **Embedded System Design**

Instructor: **Mr. Bui Quoc Bao**

Group: **05**